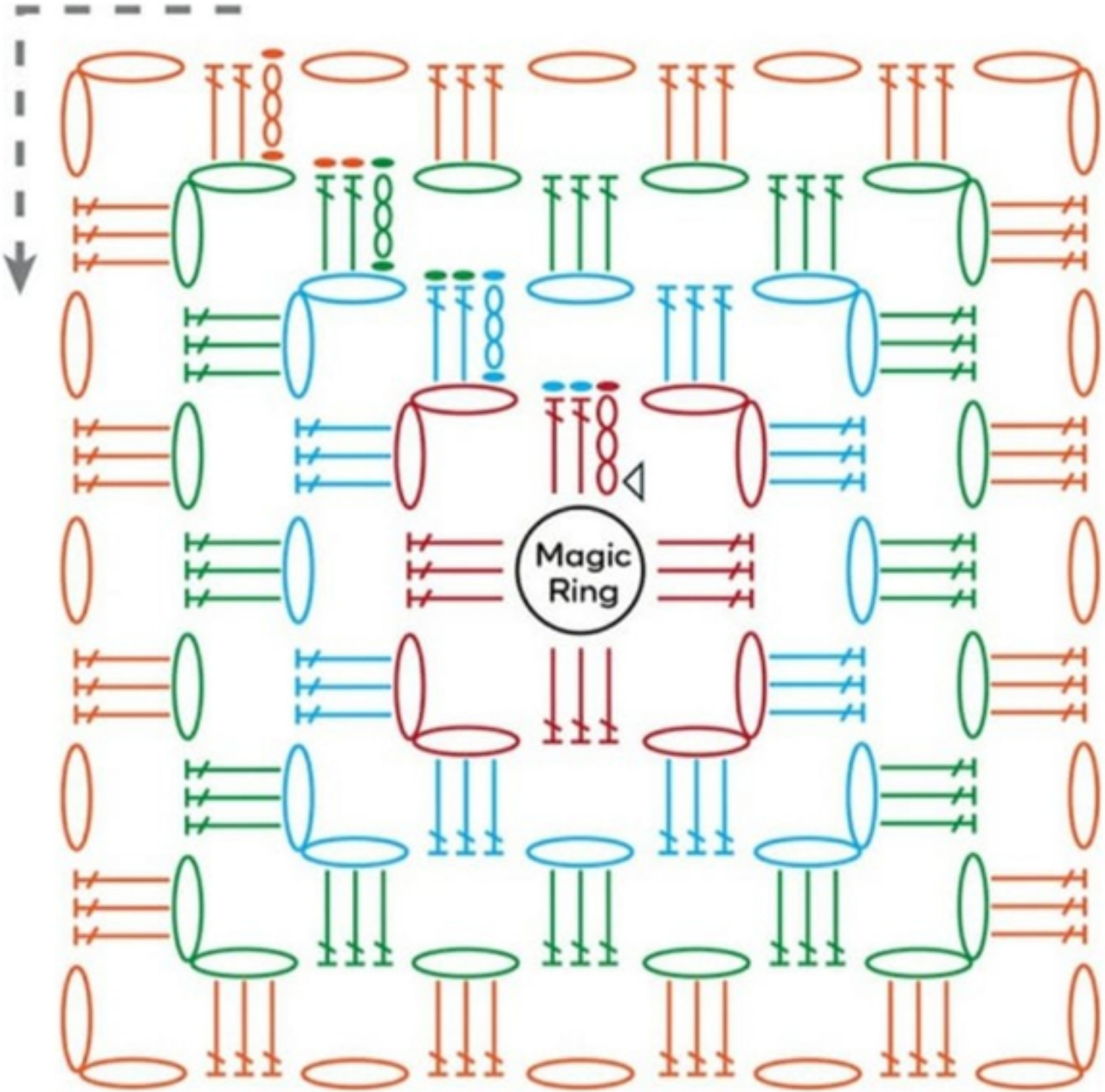
Magic
Ring